FLIR T560 24° + 14° & 42°

P/N: 89006-0101

Document identity

Publ. No.: 89006-0101
Commit: 67191
Language:
Modified: 2020-06-17
Formatted: 2020-07-02

Website

http://www.flir.com

Customer support

http://support.flir.com

Disclaimer

Specifications subject to change without further notice. Camera models and accessories subject to regional market considerations. License procedures may apply. Products described herein may be subject to US Export Regulations. Please refer to exportquestions@flir.com with any questions.

Imaging and optical data	
Infrared resolution	640 × 480 pixels
UltraMax (super-resolution)[1]	Yes
NETD	• <30 mK, 42° @ +30°C (+86°F) • <40 mK, 24° @ +30°C (+86°F) • <50 mK, 14° @ +30°C (+86°F)
Field of view	• 42° × 32° • 24° × 18° • 14° × 10°
Minimum focus distance	• 0.15 m (0.49 ft.), 42° • 0.15 m (0.49 ft.), 24° • 1.0 m (3.28 ft.), 14° • Macro mode 50 µm as option to 24°
Minimum focus distance with MSX	• 0.65 m (2.13 ft.), 42° • 0.5 m (1.64 ft.), 24° • 1.0 m (3.28 ft.), 14°
Focal length	• 10 mm (0.39 in.), 42° • 17 mm (0.67 in.), 24° • 29 mm (1.41 in.), 14°
Spatial resolution (IFOV)	• 1.2 mrad/pixel, 42° • 0.7 mrad/pixel, 24° • 0.4 mrad/pixel, 14°
Available extra lenses	• 6° (service calibration required)
Lens identification	Automatic
f number	• 1.1, 42° • 1.3, 24° • 1.5, 14°
Image frequency	30 Hz

1. Not supported when using macro.

P/N: 89006-0101

#89006-0101; r. 67191;

Imaging and optical data	
Focus	• Continuous LDM • One-shot LDM • One-shot contrast • Manual
Field of view match	Yes
Digital zoom	1–8× continuous

Detector data	
Focal plane array/spectral range	Uncooled microbolometer/7.5–14 µm
Detector pitch	12 µm

Image presentation	
Resolution	640 × 480 pixels (VGA)
Surface brightness (cd/m²)	400
Screen size	4 in.
Viewing angle	80°
Color depth (bits)	24
Aspect ratio	4:3
Auto-rotation	Yes
Touchscreen	Optically bonded PCAP
Display technology	IPS
Cover glass material	Dragontrail®
Programmable buttons	2
Viewfinder	No
Image adjustment	• Automatic • Automatic maximum • Automatic minimum • Manual

Image presentation modes	
Infrared image	Yes
Visual image	Yes
MSX	Yes
Picture in picture	Resizable and movable
Gallery	Yes

Measurement		
Camera temperature range	Object temperature range	Accuracy — for ambient temperature 15 to 35°C (59 to 95°F)
–20 to 120°C (–4 to 248°F)	–20 to 100°C (–4 to 212°F)	±2°C (±3.6°F)
	100 to 120°C (212 to 248°F)	±2%
0 to 650°C (32 to 1202°F)	0 to 100°C (32 to 212°F)	±2°C (±3.6°F)
	100 to 650°C (212 to 1202°F)	±2%
300 to 1500°C (572 to 2732°F)	300 to 1500°C (572 to 2732°F)	±2%

P/N: 89006-0101

#89006-0101; r. 67191;

Screening mode	
Sampling average mode	Recommended temperature range: 30 to 45°C (86 to 113°F) in stable room temperature Accuracy (drift): ±0.3°C (±0.5°F)[2]

Measurement analysis	
Spotmeter	3 in live mode
Area	3 in live mode
Automatic hot/cold detection	Automatic maximum/minimum markers within area
Measurement presets	• No measurements • Center spot • Hot spot • Cold spot • User preset 1 • User preset 2
Difference temperature	Yes
Reference temperature	Yes
Emissivity correction	Yes, variable from 0.01 to 1.0 or selected from materials list
Measurement corrections	Yes
External optics/windows correction	Yes

Alarm	
Color alarm (isotherm)	• Above • Below • Interval • Condensation (moisture/humidity/dewpoint) • Insulation
Measurement function alarm	Audible/visual alarms (above/below) on any selected measurement function

Set-up	
Color palettes	• Iron • Gray • Rainbow • Arctic • Lava • Rainbow HC
Setup commands	Local adaptation of units, language, date, and time formats
Languages	21

Service functions	
Camera software update	Using USB cable or SD card

Storage of images	
Storage media	Removable memory: SD card
Time lapse (Periodic image storage)	10 seconds to 24 hours (infrared)
Remote control operation	Using USB cable or Wi-Fi
Image file format	Standard JPEG, measurement data included. Infrared-only mode

2. No external blackbody needed.

P/N: 89006-0101

#89006-0101; r. 67191;

Image annotations	
Voice	60 seconds with built-in microphone and speaker (and via Bluetooth) on still images and video
Text	Text from predefined list or soft keyboard on touchscreen
Visual image annotation	Yes
Image sketch	Yes: on infrared only
Sketch	From touchscreen
METERLiNK	Wireless connection (Bluetooth) to: FLIR meters with METERLiNK
Laser distance meter information	Yes
Area measurement information	Yes
GPS	Location data automatically added to every still image and first frame in video from built-in GPS

Video recording in camera	
Radiometric infrared-video recording	RTRR (.csq)
Non-radiometric infrared-video recording	H.264 to memory card
Visual video recording	H.264 to memory card

Video streaming	
Radiometric infrared-video streaming (compressed)	Over UVC
Non-radiometric video streaming (compressed: IR, MSX, visual, Picture in Picture)	• H.264 (AVC) over RTSP (Wi-Fi) • MPEG4 over RTSP (Wi-Fi) • MJPEG over UVC and RTSP (Wi-Fi)
Visual video streaming	Yes

Digital camera	
Resolution	5 MP with LED light
Focus	Fixed
Field of view	53° × 41°
Video lamp	Built-in LED light

Laser pointer	
Laser alignment	Position is automatically displayed on the infrared image
Laser distance meter	Activated by dedicated button
Laser	Class 2, 0.05–40 m (0.16–131 ft.) ±1% of measured distance

Data communication interfaces	
Interfaces	USB 2.0, Bluetooth, Wi-Fi, DisplayPort
METERLiNK/Bluetooth	Communication with headset and external sensors
Wi-Fi	Peer to peer (ad hoc) or infrastructure (network)
Audio	Microphone and speaker for voice annotation of images
USB	USB Type-C: data transfer/video/power
USB standard	USB 2.0 High Speed

P/N: 89006-0101

#89006-0101; r. 67191;

Data communication interfaces	
Video out	DisplayPort
Video connector type	DisplayPort over USB Type-C

Radio	
Operating frequency	Bluetooth + EDR/LE: 2402–2480 MHz WLAN 2.4 GHz: 2412–2462 MHz WLAN 5 GHz: 5150–5350 MHz (DFS: only slave mode) Note that frequency band 5150–5350 MHz is for indoor use only, see national regulations.
RF output (EIRP)	Bluetooth + EDR/LE: < 10 dBm WLAN: < 17 dBm
Antenna	Integrated PIFA antenna (gain: maximum 1.4 dBi)

Power system	
Battery type	Rechargeable Li-ion battery
Battery voltage	3.6 V
Battery operating time	> 4 hours at 25°C (68°F) with typical use
Charging system	In camera (AC adapter or 12 V from a vehicle) or two-bay charger
Charging time (using two-bay charger)	3.5 h to 90% capacity, on-screen indicator
Charging temperature	0°C to +45°C (+32°F to +113°F), except for the Korean market: +10°C to +45°C (+50°F to +113°F)
External power operation	AC adapter 90–260 V AC (50/60 Hz) or 12 V from a vehicle (cable with standard plug, optional)
Power management	Automatic shut-down and sleep mode

Environmental data	
Operating temperature range	–15 to +50°C (5–122°F)
Storage temperature range	–40 to +70°C (–40 to 158°F)
Humidity (operating and storage)	IEC 60068-2-30/24 hours, 95% relative humidity, 25–40°C (77–104°F)/2 cycles
EMC	• ETSI EN 301 489-1 (radio) • ETSI EN 301 489-17 • EN 61000-6-2 (immunity) • EN 61000-6-3 (emission) • FCC 47 CFR Part 15 Class B (emission)
Radio spectrum	• ETSI EN 300 228 • FCC Part 15.249 • RSS-247 Issue 2
Encapsulation	IP 54 (IEC 60529)
Shock	25g (IEC 60068-2-27)
Vibration	2g (IEC 60068-2-6)
Safety	EN/UL/CSA/PSE 60950-1

P/N: 89006-0101

#89006-0101; r. 67191;

Physical data	
Weight (including battery)	1.4 kg (3.1 lb.)
Size (L × W × H)	• Lens vertical: 140 × 201.3 × 84.1 mm (5.5 × 7.9 × 3.3 in.) • Lens horisontal: 140 × 201.3 × 167.3 mm (5.5 × 7.9 × 6.6 in.)
Battery weight	195 g (6.89 oz.)
Battery size (L × W × H)	59 × 66 × 94 mm (2.3 × 2.6 × 3.7 in.)
Tripod mounting	UNC ¼″-20
Housing material	PCABS with TPE, magnesium
Color	Black

Warranty and service	
Warranty	http://www.flir.com/warranty/

Shipping information	
Packaging, type	Cardboard box
Packaging, contents	• Accessory box I: ◦ Power supply for battery charger ◦ Power supply, 15 W/3 A ◦ Printed documentation ◦ SD card (8 GB) ◦ USB 2.0 A to USB Type-C cable ◦ USB Type-C to HDMI and PD adapter ◦ USB Type-C to USB Type-C cable (USB 2.0 standard) • Accessory box II: ◦ Lens cap strap ◦ Lens cleaning cloth ◦ Neck strap • Battery (2 ea) • Battery charger • Extra lens, 14° • Extra lens, 42° • FLIR Thermal Studio Pro license card (1 year subscription) • Hard transport case • Infrared camera with lens • Lens cap, front • Lens cap, front and rear (only for extra lenses)
Packaging, weight	6.5 kg (14.3 lb.)
Packaging, size	500 × 190 × 370 mm (19.7 × 7.5 × 14.6 in.)
EAN-13	7332558026335
UPC-12	845188022181
Country of origin	Sweden

Supplies and accessories:

- T300238; Macro lens 2.0x with case
- T131171ACC; Remote operation button
- T199300ACC; Battery
- T199347ACC; Hard transport case for FLIR T8xx, T5xx, and GF7x series
- T199601; Hand strap and neck strap
- T199610; Battery charger
- T300030; Option, No radio
- T300344; EST Camera kit (FLIR Exx/T5xx/T8xx)
- T850105; FLIR Inspection Route - Camera Option

P/N: 89006-0101

#89006-0101; r. 67191;

- T850112; Option, Auto-screening
- T850111; Option, Dual streaming
- T199609; Option, Macro mode 50/71/101 µm for 24°
- T130337ACC; Calibration target
- T199588; IR lens, f=29 mm (14°) with case
- T199589; IR lens, f=17 mm (24°) with case
- T199590; IR lens, f=10 mm (42°) with case
- T300095; IR lens, f=70 mm (6°) with case
- T911630ACC; Power supply for camera, 15 W/3 A
- T911631ACC; USB 2.0 A to USB Type-C cable, 0.9 m
- T911633ACC; Power supply for battery charger
- T911705ACC; USB Type-C to USB Type-C cable (USB 2.0 standard), 1.0 m
- T911706ACC; Car adapter 12 V
- T911845ACC; USB Type-C to HDMI and PD adapter
- T911846ACC; USB 2.0 A to USB Type-C with Power supply
- T198495; Pouch
- T197771ACC; Bluetooth Headset
- T300244; FLIR Route Creator Plugin for FLIR Thermal Studio Pro, 1 Year Subscription
- T300342; FLIR Screen EST, Perpetual license
- T300243; FLIR Thermal Studio Pro, 1 Year Subscription
- T300083; FLIR Thermal Studio Pro, Perpetual license
- T300341; FLIR Thermal Studio Standard, 1 Year Subscription
- T300258; FLIR Thermal Studio Standard, Perpetual license
- T198583; FLIR Tools+ (download card incl. license key)
- T198696; FLIR ResearchIR Max 4 (hardware sec. dev.)
- T199013; FLIR ResearchIR Max 4 (printed license key)
- T199043; FLIR ResearchIR Max 4 Upgrade (printed license key)
- 4220499; FLIR Research Studio - 1 Year Subscription (online activation)
- 4220500; FLIR Research Studio - Perpetual License (online activation)
- 4220646; FLIR Research Studio - Perpetual License (USB dongle)
- INST-EW-0155; Extended Warranty 1 Year for A3xxf, T540, T600/bx, T610, T840, T860
- INST-EWGM-0165; Premium Service Package for T540, T600/bx, T610, T840, T860
- INST-GM-0150; General Maintenance Package for T540, T6xx, T840, T860

Camera housing

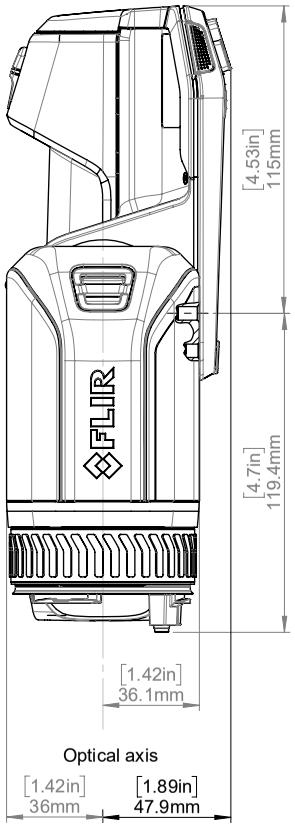

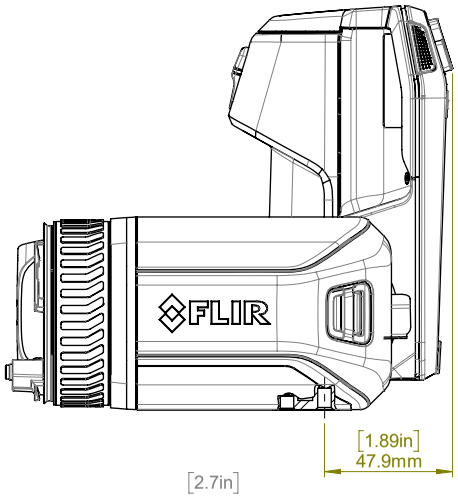

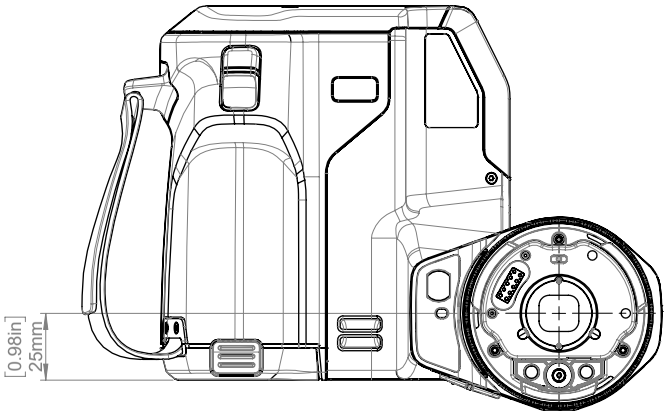

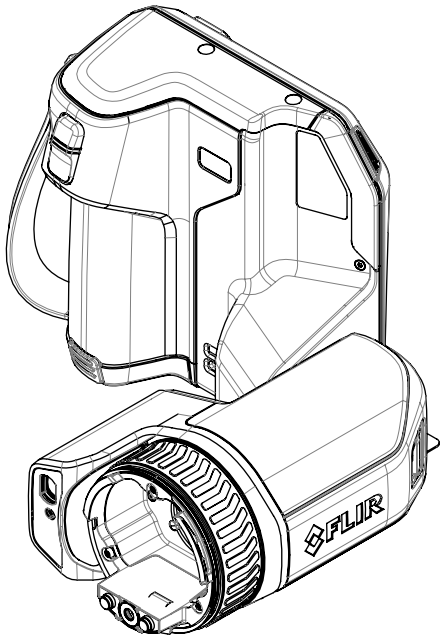

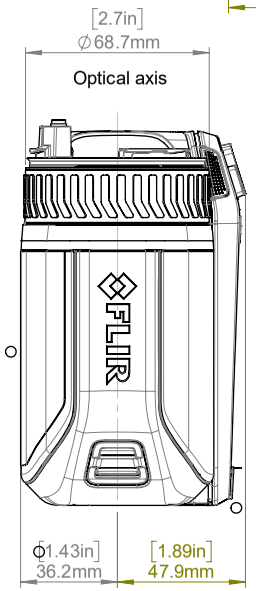

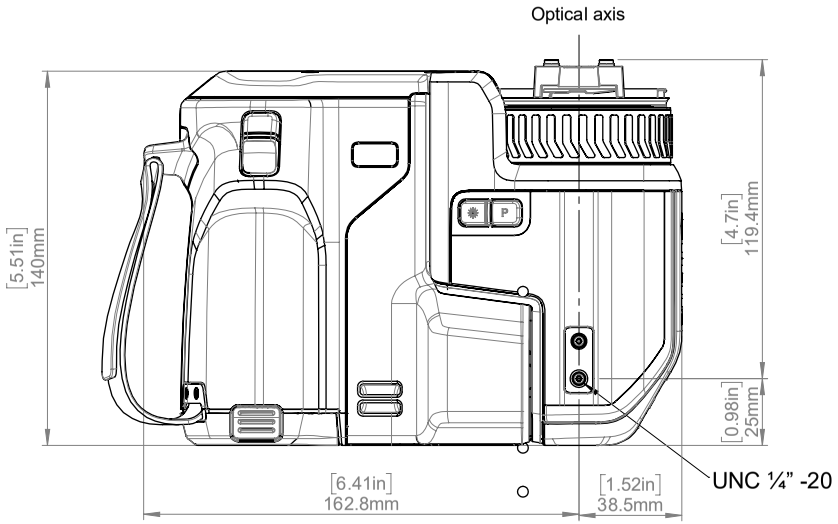

Modified	Check	Drawn by
2020-01-14	JOHE	R&D Instruments

Denomination

Basic dimensions FLIR T5xx

Size	Scale	Sheet
A3	1:2	1(4)

Drawing No.	Rev
T129991	B

Camera with Lens IR f=10mm (42°)
Camera with Lens IR f=17mm (24°)
Camera with Lens IR f=29mm (14°)
Camera with Lens IR Close-up 2x

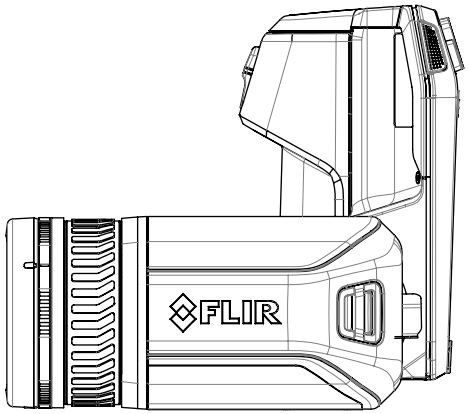

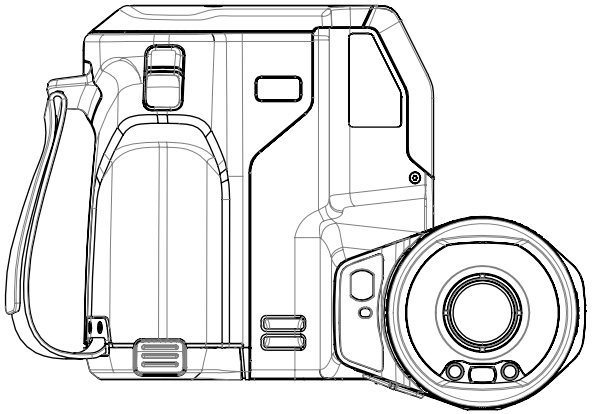

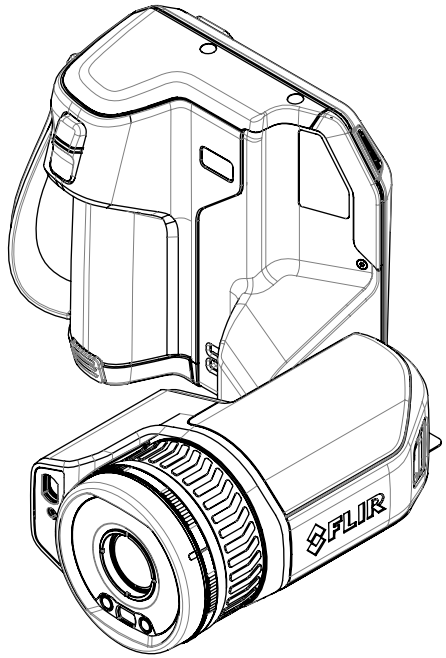

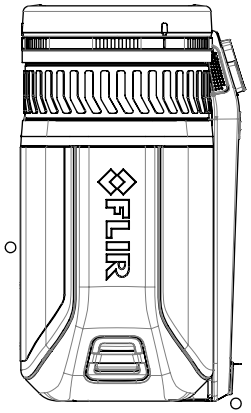

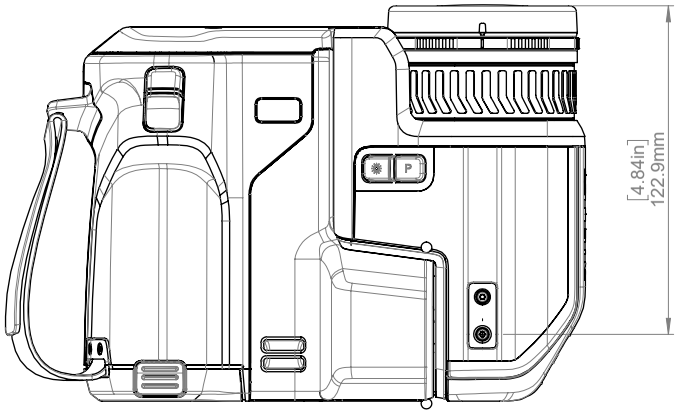

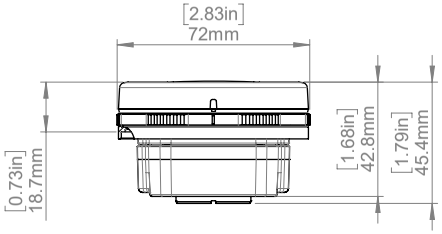

For additional dimensions see page 1

Modified	Check	Drawn by	
2020-01-14	JOHE	R&D Instruments	
Denomination			Size A3
Basic dimensions FLIR T5xx			Scale 1:5
			Sheet 2(4)
			Drawing No. T129991
			Rev B

Camera with Lens IR f=70mm (6°)

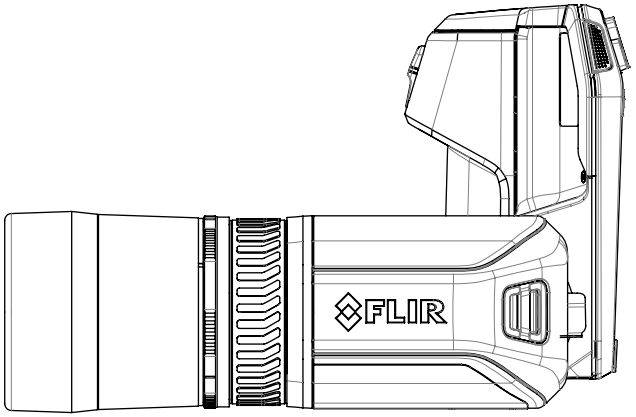

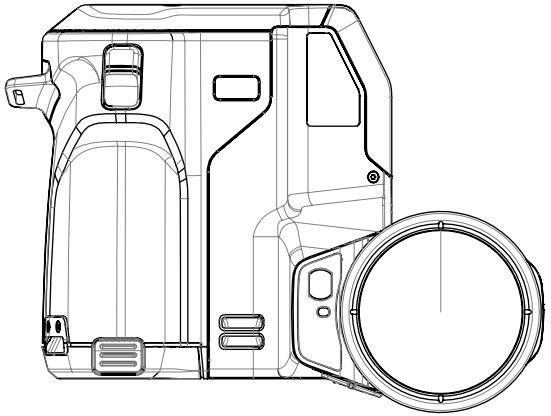

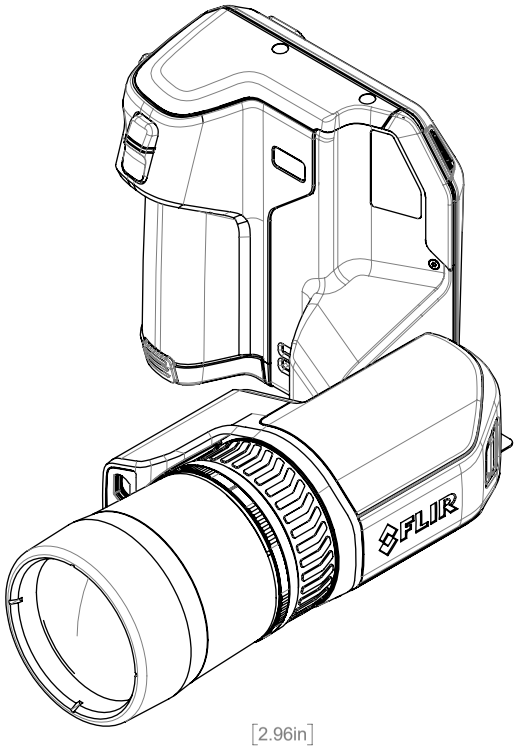

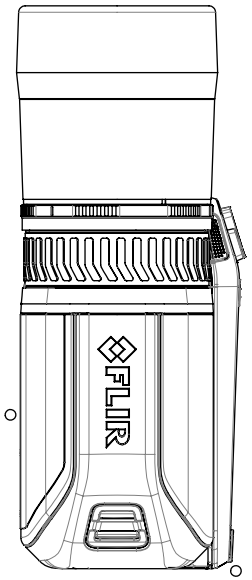

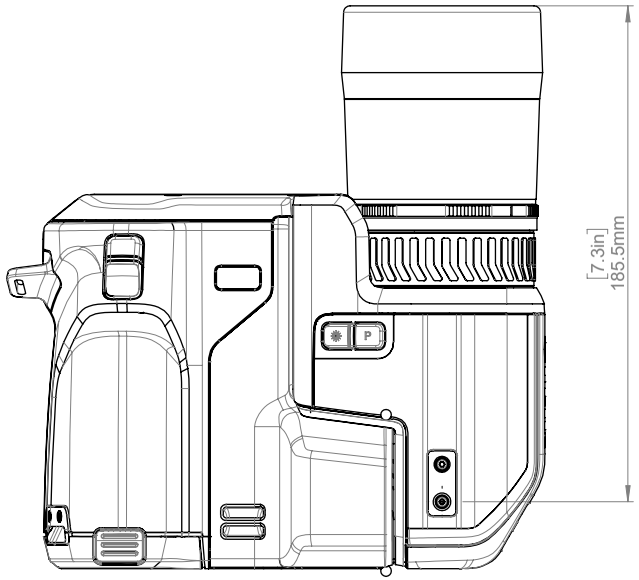

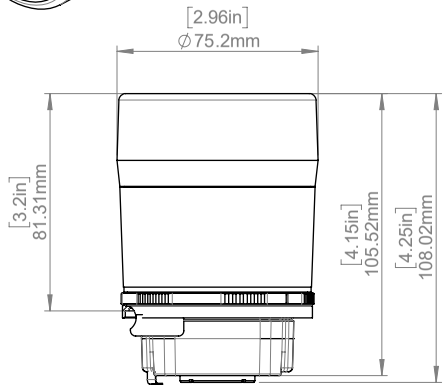

For additional dimensions see page 1

Modified	Check	Drawn by	
2020-01-14	JOHE	R&D Instruments	

Denomination

Basic dimensions FLIR T5xx

Size	Sheet
A3	3(4)
Scale 1:5	
Drawing No. T129991	Rev B

FLIR | The World's Sixth Sense™

February 2, 2019 Täby, Sweden AQ320246

CE Declaration of Conformity – EU Declaration of Conformity

Product: FLIR T5XX-, T8XX- and GF7X-series
Name and address of the manufacturer:
FLIR Systems AB
PO Box 7376
SE-187 15 Täby, Sweden

This declaration of conformity is issued under the sole responsibility of the manufacturer.
The object of the declaration: FLIR T5XX-, T8XX- and GF7X-series (Product Model Name FLIR-T8210).
The object of the declaration described above is in conformity with the relevant Union harmonisation legislation:

Directives:

Directive	2012/19/EU	Waste electrical and electric equipment
Directive	2014/53/EU	Radio Equipment Directive (RED)
Directive	1999/519/EC	Limitation of exposure to electromagnetic fields (SAR)
Directive	2011/65/EU	RoHS and 2015/830/EU

Standards:

EMC Radio:	ETSI EN 301 489-1 + -17	EMC for radio, broadband data transmission
Emission:	EN 61000-6-3/A1:2011	EMC – Generic standards
Immunity:	EN 61000-6-2:2005	Electromagnetic Compability Generic
	EN 301489-1:2016 v2.1.0	ERM – EMC for radio equipment
	EN 301489-17:2012 v2.2.1	ERM – EMC Wideband data
Laser:	EN 60825-1	Safety of laser products
Radio:	ETSI EN 300 328 v2.1.1	Harmonized EN covering essential requirements of the R&TTE Directive
	ETSI EN 301 893 v.2.1.1	5GHz WLAN
	EN 303 413 v1.1.0	Radio Spectrum Efficiency (gps)
SAR:	EN 50566:2013/AC:2014	Handheld and body mounted wireless
	EN 62209-02:2010	Handheld and body mounted wireless
Safety:	IEC 60950-1:2005+A1:2009+ A2:2013 EN 60950-1:2006+ A11:2009+AC:2011+A12:2011	Information technology equipment
RoHS:	EN 50581:2012	Technical documentation

FLIR Systems AB
Quality Assurance

Lea Dabiri
Quality Manager